Cordless Screw Driver - 0 602 491 671 - BT ANGEL E...

www.powertools-aftersalesservice.com

BOSCH

Item	Part Number	Description	Illustration	Price	Quantity	Price Group
1	3 605 105 029	Housing Section	1	£44,70	1	42
4	3 607 200 096	Electronic Assembly	1	£300,00	1	58
8	3 600 224 064	Retaining ring	1	£1,75	1	15
10	3 601 099 003	Switch Slide	1	£0,70	1	11
11	3 605 700 170	Angle Flange	1	£53,40	1	44
14	3 600 423 004	Sleeve	1	£2,45	1	17
15	3 604 611 037	Compression Spring	1	£1,75	1	15
16	3 605 105 023	Led-Holder	1	£4,05	1	21
17	3 605 105 024	Led-Holder	1	£4,05	1	21
19	3 605 806 201	Gear Housing	1	£44,70	1	42
22	3 607 030 426	Planetary Gear Train	1	£164,00	1	53
40	3 607 031 578	Assembly kit	1	£200,00	1	55
51	1 900 210 114	O-Ring	1	£1,20	1	13
52	3 600 210 128	O-Ring	1	£2,45	1	17
53	3 600 210 129	O-Ring	1	£1,00	1	12
56	3 600 210 130	O-Ring	1	£1,00	2	12
60	3 601 923 022	Switching Element	1	£1,75	1	15
61	3 604 611 022	Compression Spring	1	£1,30	1	14
62	3 601 923 023	Slide	1	£1,75	1	15
71	3 604 460 132	Light Conductor	1	£1,00	2	12
80	2 603 490 018	Lens Head Screw	1	£0,45	14	10
90	3 600 106 020	Ring	1	£1,30	1	14
101	3 606 445 044	Clutch Element	1	£67,00	1	46
102	3 603 124 025	Output Shaft	1	£78,50	1	47
109	3 604 619 015	Compression Spring	1	£3,05	1	19
110	3 604 601 001	Retaining ring	1	£0,70	1	11
115	3 600 001 000	Sealing plate	1	£1,30	1	14
116	3 600 134 015	Setting Ring	1	£18,20	1	33
119	3 600 190 030	Support Disc	1	£4,05	1	21
120	3 603 344 052	Catch Disk	1	£18,20	1	33

Item	Part Number	Description	Illustration	Price	Quantity	Price Group
124	3 600 101 002	Support Disc	1	£1,00	3	12
127	1 903 230 009	Ball	1	£0,45	9	10
128	1 903 230 011	Ball	1	£0,45	6	10
140	2 916 659 006	Spring retaining ring	1	£0,70	1	11
227	3 606 300 138	Pinion	1	£37,10	1	40
228	3 606 334 054	Ring Gear	1	£3,45	1	20
229	3 606 337 210	Carrier	1	£12,50	1	30
231	3 606 316 075	Cylindrical Gear	1	£7,40	3	26
232	3 600 913 006	Needle-Roller Cage	1	£3,45	6	20
233	3 603 201 047	Needle Roller	1	£0,70	6	11
234	2 600 100 586	Shim	1	£0,70	6	11
238	3 606 337 211	Planetary-Gear Carrier	1	£22,40	1	35
239	3 606 316 062	Cylindrical Gear	1	£8,20	3	27
241	3 600 905 045	Deep-Groove Ball Bearing	1	£8,20	1	27
243	3 600 102 021	Stop Disc	1	£1,75	1	15
248	3 600 101 040	Stop Disc	1	£1,00	2	12
657	3 607 950 020	Screwdriver	1	£9,50	1	28
658	3 601 376 007	Single-Head Eng. Wrench	1	£4,75	1	22
659	3 601 923 017	Suspension Loop	1	£9,50	1	28
697	3 608 872 557	Protective Cap	1	£0,70	1	11
701	3 607 020 041	Angle Screwdriver Head	1	£589,00	1	65
801	2 607 335 881	Slide-In Accu Package	1	£127,00	1	51
801	2 607 335 655	Accumulator Battery	1	£88,30	1	48
802	3 607 031 608	Assembly kit	1	£78,50	1	47
803	3 607 600 406	Light-Emitting-Diode	1	£8,20	1	27
804	3 609 202 762	Microswitch	1	£13,80	1	31
805	3 609 202 766	Plug Set	1	£3,05	1	19
806	3 607 200 083	On-Off Switch	1	£33,80	1	39
854	2 607 224 483	Fast Charger	1	£142,00	1	52
854	2 607 225 029	Fast Charger	1	£53,40	1	44
854	2 607 224 487	Fast Charger	1	£142,00	1	52
854	2 607 224 489	Fast Charger	1	£142,00	1	52
854	2 607 224 491	Fast Charger	1	£142,00	1	52
854	2 607 224 493	Fast Charger	1	£142,00	1	52
854	2 607 224 495	Fast Charger	1	£142,00	1	52
855	3 601 119 367	Nameplate	1	£1,75	1	15
866	3 601 119 368	Manufacturer's Nameplate	1	£1,75	1	15
890	3 600 106 027	Parts Set	1	£6,00	1	24
890	3 600 106 028	Parts Set	1	£6,00	1	24
890	3 600 106 029	Parts Set	1	£6,00	1	24
890	3 600 106 030	Parts Set	1	£6,00	1	24
890	3 600 106 031	Parts Set	1	£6,00	1	24
890	3 600 106 032	Parts Set	1	£6,00	1	24
890	3 600 106 033	Parts Set	1	£6,00	1	24

Illustration - Type E

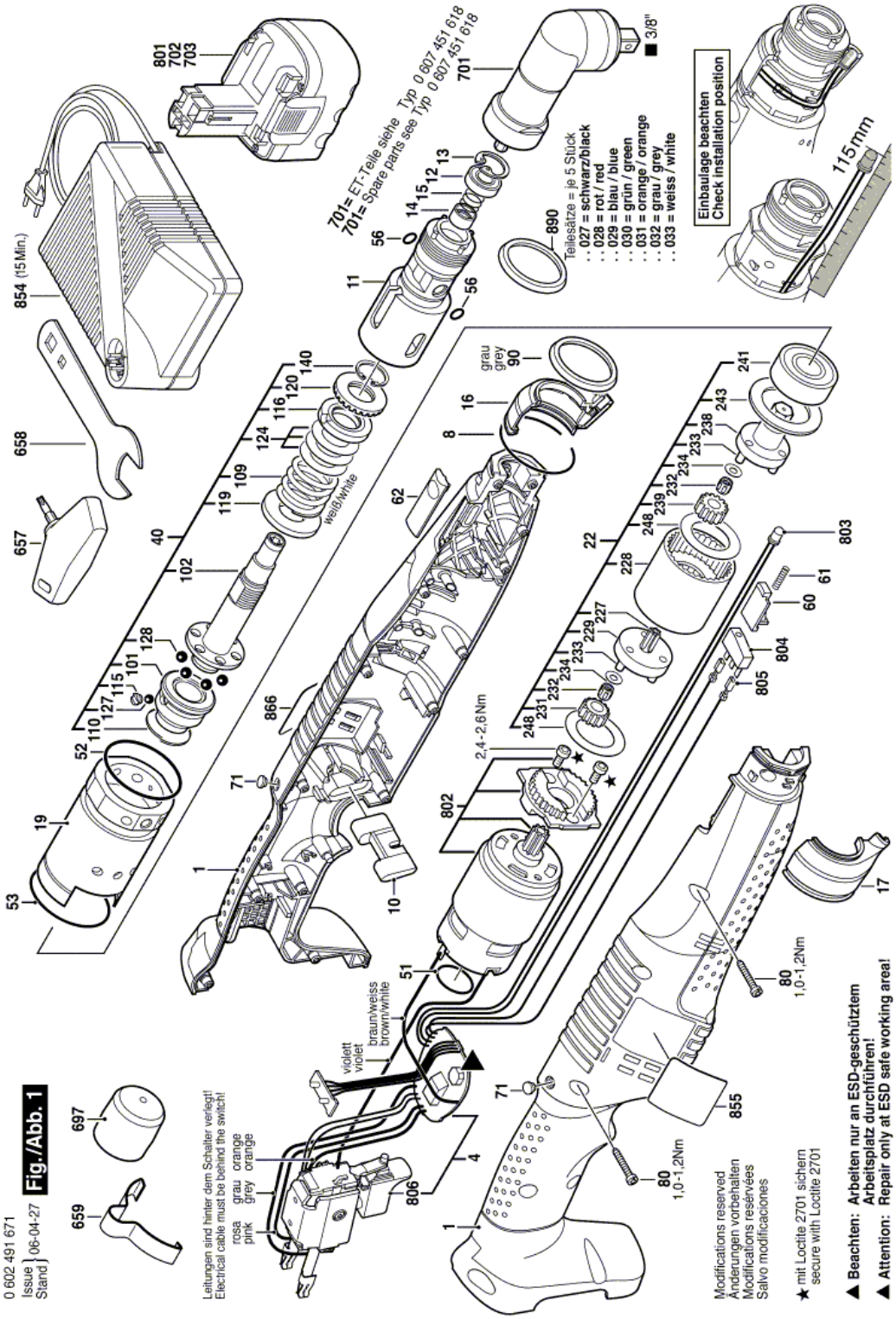

Information subject to change without further notice.