Standard Unit - 0 602 491 652 - BT ANGLE EXACT 6

www.powertools-aftersalesservice.com

BOSCH

Item	Part Number	Description	Illustration	Price	Quantity	Price Group
1	3 605 105 028	Housing Section	1	£44,70	1	42
4	3 607 200 095	Electronic Assembly	1	£300,00	1	58
8	1 614 601 016	Retaining ring	1	£0,70	1	11
10	3 601 099 003	Switch Slide	1	£0,70	1	11
11	3 605 700 165	Angle Flange	1	£37,10	1	40
12	1 280 905 004	Deep-Groove Ball Bearing	1	£18,20	1	33
13	2 916 660 003	Spring retaining ring	1	£0,45	1	10
14	3 600 423 004	Sleeve	1	£2,45	1	17
15	3 604 611 037	Compression Spring	1	£1,75	1	15
16	3 605 105 019	Led-Holder	1	£4,05	1	21
17	3 605 105 020	Led-Holder	1	£4,05	1	21
18	3 600 210 012	O-Ring	1	£0,70	1	11
20	3 606 309 060	Pinion	1	£30,20	1	38
29	2 605 719 011	Intermediate Flange	1	£1,20	1	13
30	3 607 030 469	Planetary Gear Train	1	£41,40	1	41
40	3 607 031 568	Assembly kit	1	£127,00	1	51
60	3 601 923 022	Switching Element	1	£1,75	1	15
61	3 604 611 022	Compression Spring	1	£1,30	1	14
62	3 601 923 023	Slide	1	£1,75	1	15
71	3 604 460 132	Light Conductor	1	£1,00	2	12
80	2 603 490 018	Lens Head Screw	1	£0,45	11	10
82	2 603 414 048	Socket head cap screw	1	£0,70	2	11
90	3 600 106 022	Ring	1	£1,30	1	14
101	3 606 445 043	Clutch Element	1	£67,00	1	46
102	3 603 124 034	Drive Shaft	1	£33,80	1	39
109	3 604 619 003	Compression Spring	1	£2,45	1	17
110	3 600 224 053	Retaining ring	1	£0,70	1	11
115	3 601 023 011	Sealing plate	1	£1,20	1	13
116	3 600 134 014	Setting Ring	1	£18,20	1	33
119	3 600 190 027	Support Disc	1	£4,05	1	21

Item	Part Number	Description	Illustration	Price	Quantity	Price Group
120	3 603 344 047	Catch Disk	1	£13,80	1	31
127	1 903 230 006	Ball	1	£0,45	10	10
128	1 903 230 008	Ball	1	£0,45	6	10
140	2 916 080 012	Locking Washer	1	£0,70	1	11
657	3 607 950 020	Screwdriver	1	£9,50	1	28
658	3 601 376 007	Single-Head Eng. Wrench	1	£4,75	1	22
659	3 601 923 024	Suspension Loop	1	£4,05	1	21
697	3 608 872 557	Protective Cap	N/A	£0,70	1	11
750	3 605 500 171	Protective Cap	1	£15,70	1	32
801	2 607 335 877	Slide-In Accu Package	1	£101,40	1	49
801	2 607 335 659	Accumulator Battery	1	£61,20	1	45
802	3 607 031 553	DC motor	1	£53,40	1	44
803	3 607 600 405	Light-Emitting-Diode	1	£8,20	1	27
804	3 609 202 762	Microswitch	1	£13,80	1	31
805	3 609 202 766	Plug Set	1	£3,05	1	19
806	3 607 200 083	On-Off Switch	1	£33,80	1	39
854	2 607 224 483	Fast Charger	1	£142,00	1	52
854	2 607 225 029	Fast Charger	1	£53,40	1	44
854	2 607 224 487	Fast Charger	1	£142,00	1	52
854	2 607 224 489	Fast Charger	1	£142,00	1	52
854	2 607 224 491	Fast Charger	1	£142,00	1	52
854	2 607 224 493	Fast Charger	1	£142,00	1	52
854	2 607 224 495	Fast Charger	1	£142,00	1	52
855	3 601 119 377	Nameplate	1	£1,75	1	15
866	3 601 119 378	Manufacturer's Nameplate	1	£1,75	1	15
890	3 600 106 027	Parts Set	1	£6,00	1	24
890	3 600 106 028	Parts Set	1	£6,00	1	24
890	3 600 106 029	Parts Set	1	£6,00	1	24
890	3 600 106 030	Parts Set	1	£6,00	1	24
890	3 600 106 031	Parts Set	1	£6,00	1	24
890	3 600 106 032	Parts Set	1	£6,00	1	24
890	3 600 106 033	Parts Set	1	£6,00	1	24

Illustration - Type E

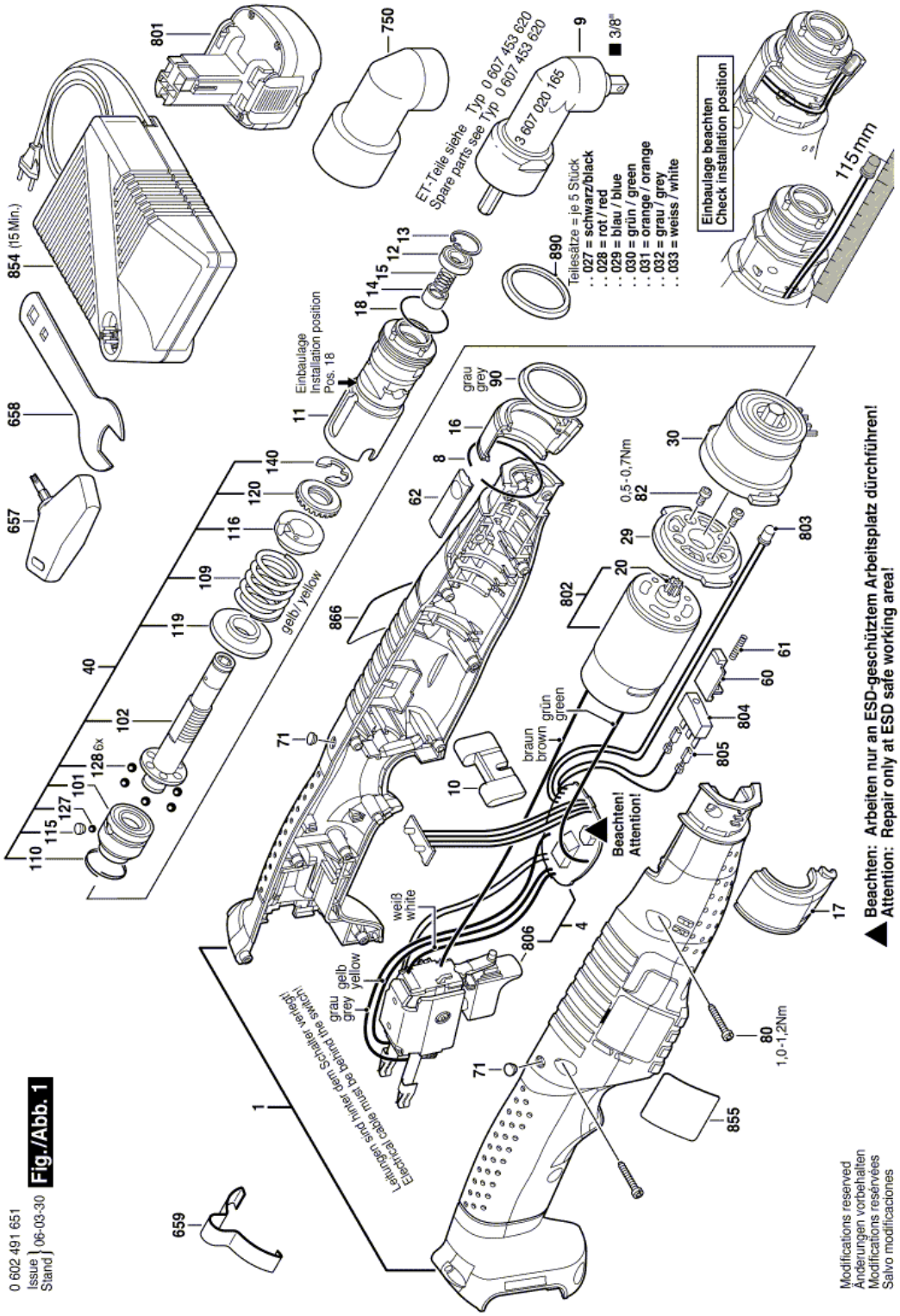

Information subject to change without further notice.