Cordless Screw Driver - 0 602 491 435 - BT EXACT 9

www.powertools-aftersalesservice.com

Item	Part Number	Description	Illustration	Price	Quantity	Price Group
1	3 605 105 027	Housing Section	1	£18,20	1	33
4	3 607 200 094	Electronic Assembly	1	£300,00	1	58
10	3 601 099 003	Switch Slide	1	£0,70	1	11
20	3 606 328 018	Pinion	1	£2,00	1	16
29	2 605 719 011	Intermediate Flange	1	£1,20	1	13
30	3 607 030 409	Planetary Gear Train	1	£27,30	1	37
40	3 607 031 535	Assembly kit	1	£184,00	1	54
60	3 601 923 022	Switching Element	1	£1,75	1	15
61	3 604 611 022	Compression Spring	1	£1,30	1	14
62	3 601 923 023	Slide	1	£1,75	1	15
71	3 604 460 132	Light Conductor	1	£1,00	2	12
80	2 603 490 018	Lens Head Screw	1	£0,45	8	10
82	2 603 414 048	Socket head cap screw	1	£0,70	2	11
101	3 606 445 043	Clutch Element	1	£67,00	1	46
102	3 603 124 023	Output Shaft	1	£41,40	1	41
106	3 604 610 011	Compression Spring	1	£1,00	1	12
109	3 604 619 020	Compression Spring	1	£2,65	1	18
110	3 600 224 053	Retaining ring	1	£0,70	1	11
113	3 600 499 003	Clamp Bushing	1	£3,45	1	20
114	3 600 921 001	Plain bearing	1	£3,45	1	20
115	3 601 023 011	Sealing plate	1	£1,20	1	13
116	3 600 134 014	Setting Ring	1	£18,20	1	33
117	1 600 101 023	Plain Washer	1	£0,70	1	11
119	3 600 190 027	Support Disc	1	£4,05	1	21
120	3 603 344 046	Catch Disk	1	£20,20	1	34
125	3 600 202 007	Thrust ring	1	£2,65	1	18
126	3 600 224 006	Retaining ring	1	£0,70	1	11
127	1 903 230 006	Ball	1	£0,45	10	10
128	1 903 230 008	Ball	1	£0,45	6	10
129	1 903 230 003	Ball	1	£0,45	1	10

Item	Part Number	Description	Illustration	Price	Quantity	Price Group
140	2 916 080 012	Locking Washer	1	£0,70	1	11
143	3 600 210 038	O-Ring	1	£1,00	1	12
145	3 600 210 116	O-Ring	1	£0,70	1	11
657	3 607 950 020	Screwdriver	1	£9,50	1	28
750	3 601 923 024	Suspension Loop	1	£4,05	1	21
751	3 605 500 172	Protective Cap	1	£9,50	1	28
801	2 607 335 877	Slide-In Accu Package	1	£101,40	1	49
801	2 607 335 659	Accumulator Battery	1	£61,20	1	45
802	3 607 031 551	DC motor	1	£18,20	1	33
803	3 607 600 404	Light-Emitting-Diode	1	£8,20	1	27
804	3 609 202 762	Microswitch	1	£13,80	1	31
805	3 609 202 766	Plug Set	1	£3,05	1	19
806	3 607 200 083	On-Off Switch	1	£33,80	1	39
807	2 607 335 877	Slide-In Accu Package	1	£101,40	1	49
820	3 607 031 570	Catch Disk	1	£15,70	1	32
854	2 607 224 483	Fast Charger	1	£142,00	1	52
854	2 607 225 029	Fast Charger	1	£53,40	1	44
854	2 607 224 487	Fast Charger	1	£142,00	1	52
854	2 607 224 489	Fast Charger	1	£142,00	1	52
854	2 607 224 491	Fast Charger	1	£142,00	1	52
854	2 607 224 493	Fast Charger	1	£142,00	1	52
854	2 607 224 495	Fast Charger	1	£142,00	1	52
855	3 601 119 359	Nameplate	1	£1,75	1	15
866	3 601 119 360	Manufacturer's Nameplate	1	£1,75	1	15
890	3 600 106 010	Parts Set	1	£10,70	1	29
890	3 600 106 011	Parts Set	1	£10,70	1	29
890	3 600 106 012	Parts Set	1	£10,70	1	29
890	3 600 106 013	Parts Set	1	£10,70	1	29
890	3 600 106 014	Parts Set	1	£10,70	1	29
890	3 600 106 015	Parts Set	1	£10,70	1	29

Illustration - Type E

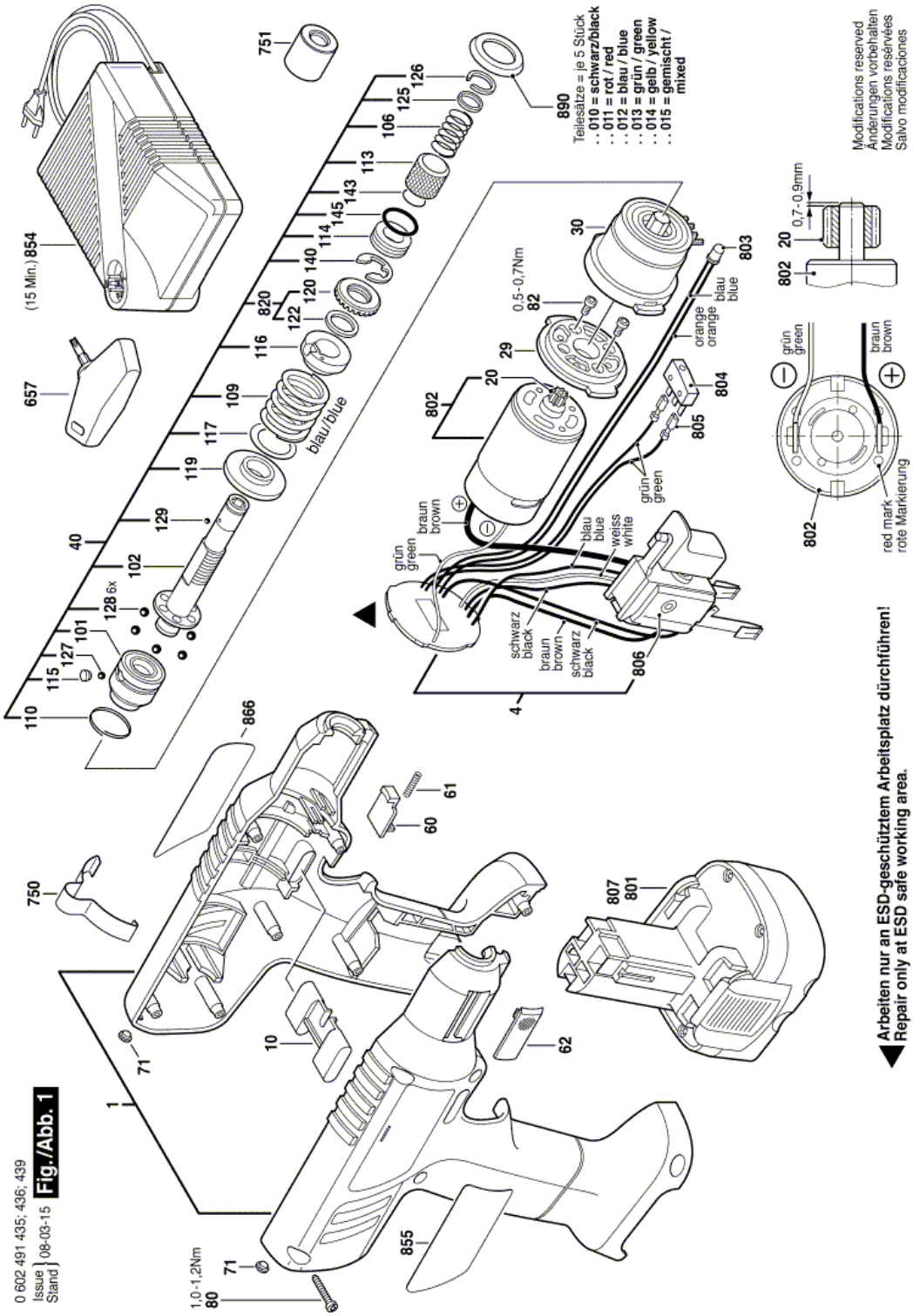

Information subject to change without further notice.