POP Bolt™

Rapid Fastening System

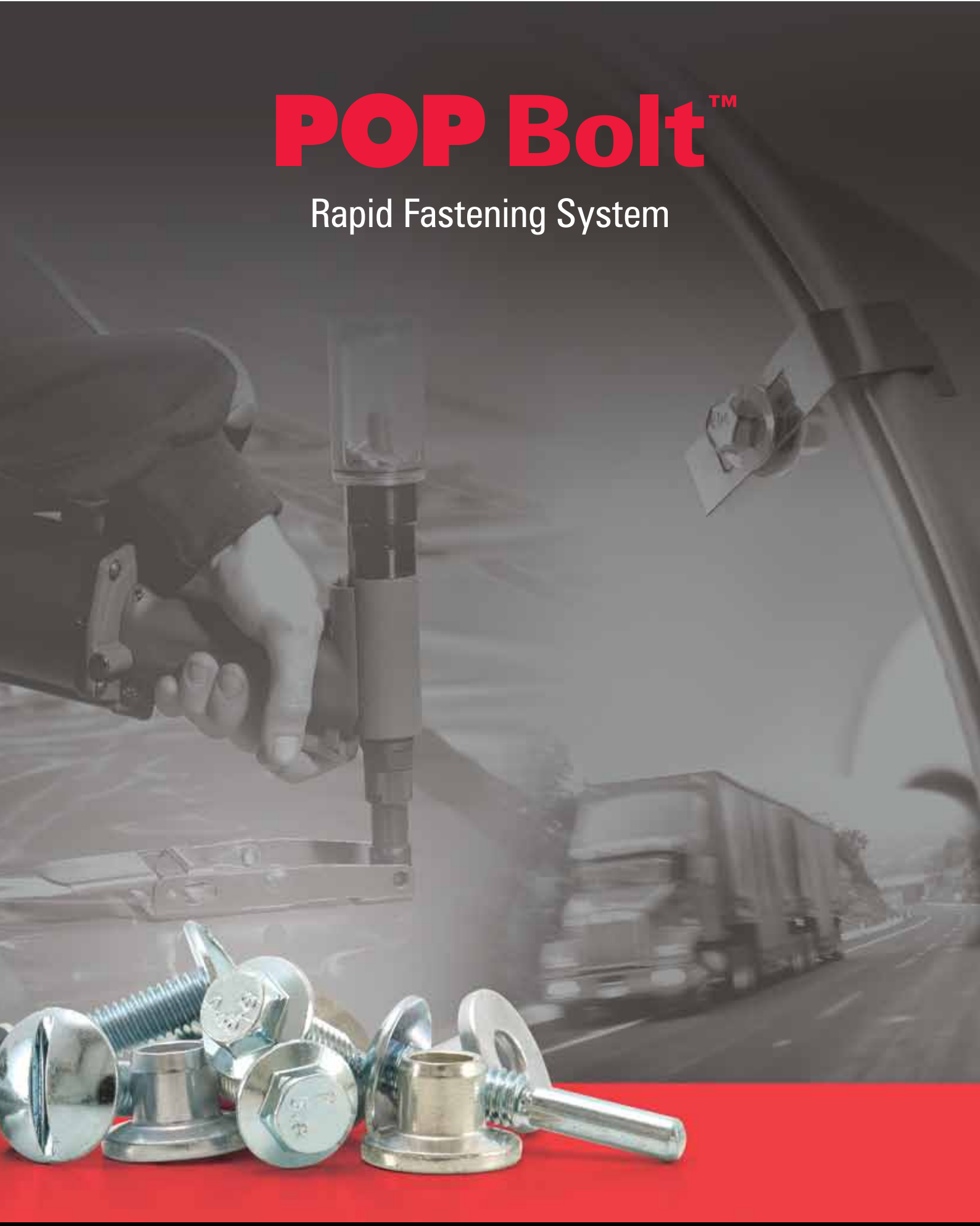

Emhart® Teknologies

www.emhart.com

Real challenges.

In today's rapidly changing environment our customers face many challenges when selecting the best assembly systems and components.

With international experience in assembly techniques Emhart can meet those challenges by calling upon a wide and growing breadth of products and systems, many of which have been specially designed for the needs of a diverse range of industries.

Emhart's team of Application Engineers are on hand to offer full technical support and to make recommendations that will guide you to the most efficient and effective assembly solution available in the market place today.

Emhart proudly partners the world's household names in manufacturing and industry worldwide.

Real solutions.

With over 100 years experience in the design and manufacture of assembly technology, Emhart is a company infused with the spirit and culture of innovation.

In striving to be the "best in class" supplier, Emhart endeavors to offer flexibility and responsiveness. Our core product lines offer a wide range of choice for hole or no-hole assembly, complete with the setting system to match your manufacturing environment.

Serving our European customers directly or through our network of experienced distributors, we delivery quality products and services on time, every time.

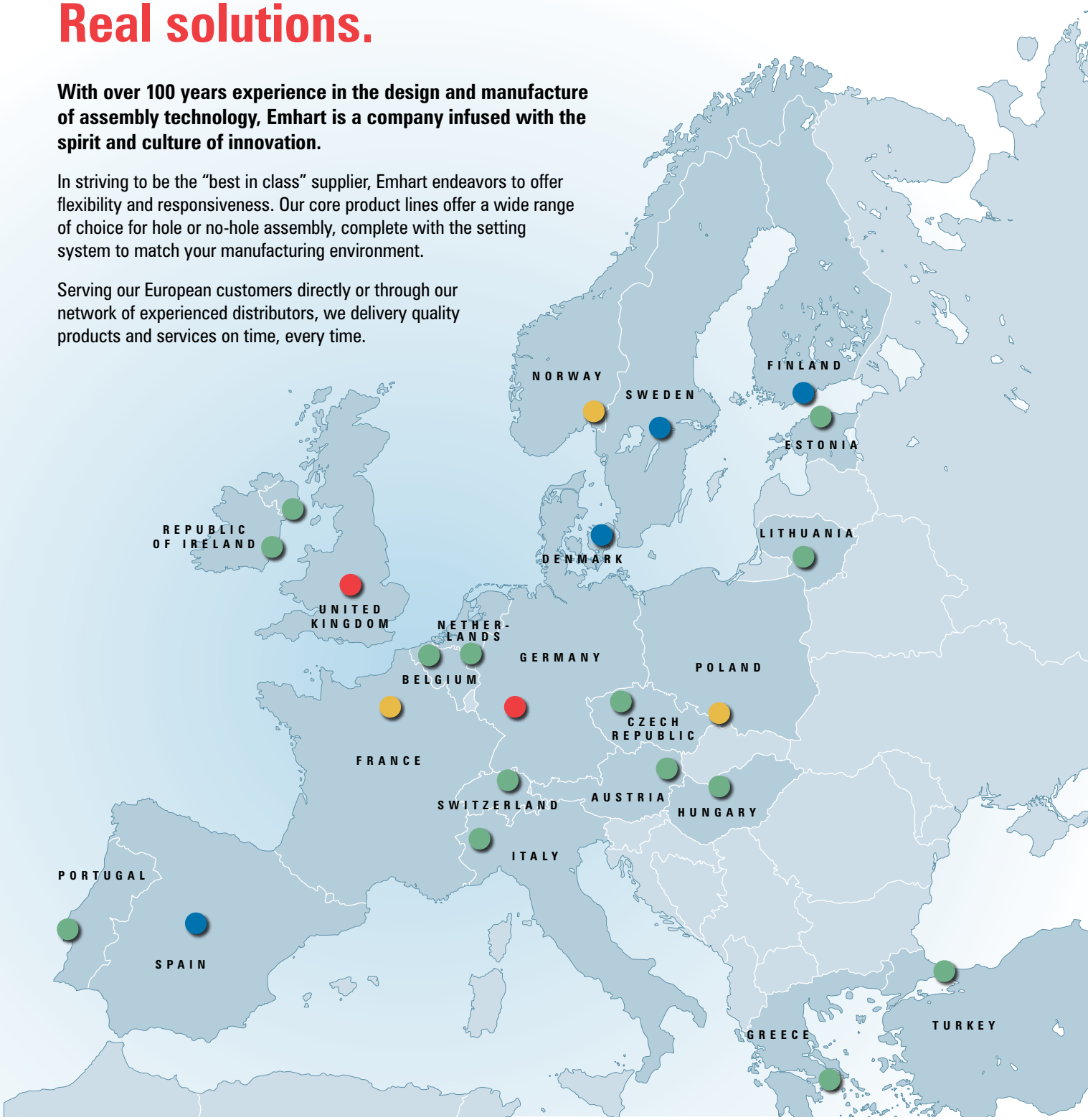

Manufacturing
Sales Office
Warehouse
Distribution Network

Sales Office
Warehouse
Distribution Network

Sales Office
Distribution Network

Distribution Network

Further contact details can be found on the back cover.

POP Bolt™

POP Bolt™ is a rapid setting, removable and re-useable fastening system. Delivering the speed of riveting combined with the flexibility of a nut and bolt, POP Bolt™ is ideal for applications that require a high strength fastener that facilitates servicing.

POP Bolt™ Twinfix

POP Bolt™ Twinfix has been developed specifically for the transport sector. The Twinfix carrier is designed to aid the fastening of buckles and rollers to truck curtains. The Twinfix allows for servicing and can be used in conjunction with Secureset to give a tamper resistant joint.

POP Bolt™ Options

POP Bolt™ is available with different head styles. Weld stud and clinch bolt configurations can be supplied on request.

POP Bolt™ Tools

The POP Bolt™ tool range includes a compact, lightweight pneumatic-hydraulic tool and a cordless, rechargeable battery tool.

The POP Bolt™ rapid installation sequence is simple.

1. Place the bolt through the holes in the materials to be fastened and load the collar into the setting tool.
2. Position the tool and loaded collar over the bolt.
3. Pull the trigger of the setting tool. As the tool pulls the bolt mandrel the collar clamps down onto the threaded section of the bolt. The collar is swaged onto the bolt forming an internal thread, while the tool's nosepiece forms an external hex shape, transforming the collar into a nut.
4. The POP Bolt™ is now assembled.

POP Bolt™ Features

POP Bolt™

POP Bolt™ is a rapid setting, removable and re-useable two piece, fastening system.

POP Bolt™ combines the advantages in functionality achieved by a traditional nut and bolt with those of a conventional pin and collar fastener. Helical threads, formed during the setting process, allow removal and reuse of the POP Bolt's™ nut, while the swaging process results in a vibration resistant joint.

The POP Bolt™ installation process takes under one second, resulting in reduced assembly time.

POP Bolt™ offers:

- **Up to a 60% reduction in process time when compared to traditional fastening methods, increasing productivity**
- Elimination of pre-assembly processes, increasing efficiency
- Rapid installation (setting in under a second), that reduces operator fatigue
- Elimination of cross threading, as the nut's thread is formed during the setting process
- Consistent clamp load after installation, independent of operator control, eradicating the need for torque control and process monitoring
- An easily removable and reusable and vibration resistant nut, that facilitates servicing of components
- Easily set with either a lightweight, pneumatic-hydraulic power tool or a cordless, rechargeable battery tool

Ease of Assembly

With POP Bolt™ the collar is simply and quickly loaded into the setting tool.

The time consuming pre-assembly of nut and bolt, prior to tightening, is eliminated.

Ease of Maintenance

The POP Bolt™ nut is easily removed with a conventional wrench, allowing for repair or maintenance work.

Once removed the nut can be reapplied with a torque value of up to 10 Nm.

Typical Applications

Truck curtain buckles and rollers

Industrial lighting

Componentry

Castors

Scaffold

Components and Installation

POP Bolt™ system components

The diagram illustrates the components of the POP Bolt™ fastening system.

After the non-threaded, flanged collar is loaded into the setting tool it is placed over the threaded section of the bolt. The jaws of the setting tool engage the non-threaded section of the bolt, which is known as the mandrel.

Once the jaws are engaged, they pull on the mandrel and force the collar into a hexagonal former located in the nosepiece of the tool.

The former forces the external collar into a hexagonal shape, while the swaging of the collar onto the bolt forms internal threads. The collar is transformed into a nut.

On completion the mandrel breaks at the crimp, and is ejected into the collector at the rear of the tool.

This process results in the creation of a serviceable, mechanical joint with a consistent clamp force.

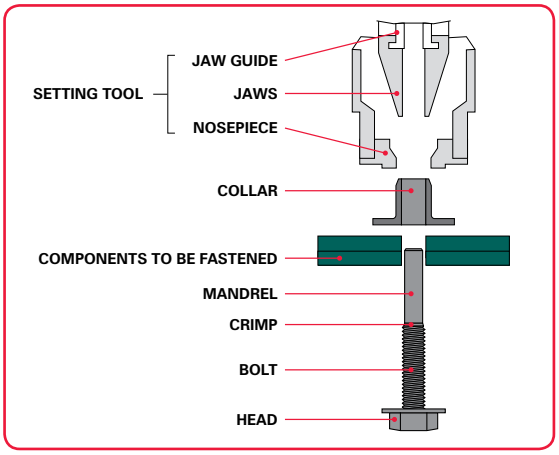

Installation method

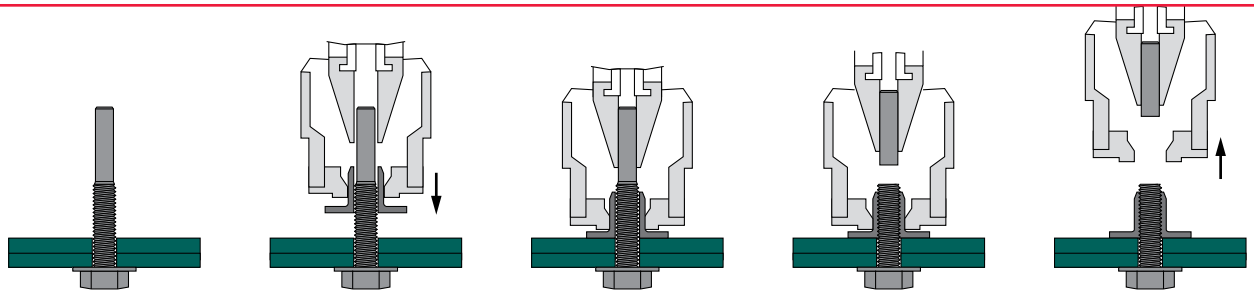

1 Place the bolt through the holes in the materials to be fastened

2 Load the collar into the setting tool and place it over the bolt

3 Pull the trigger of the setting tool

4 The setting tool trans-forms the collar into a nut and the mandrel breaks

5 The mandrel is ejected and installation is complete

Installation sequence curve

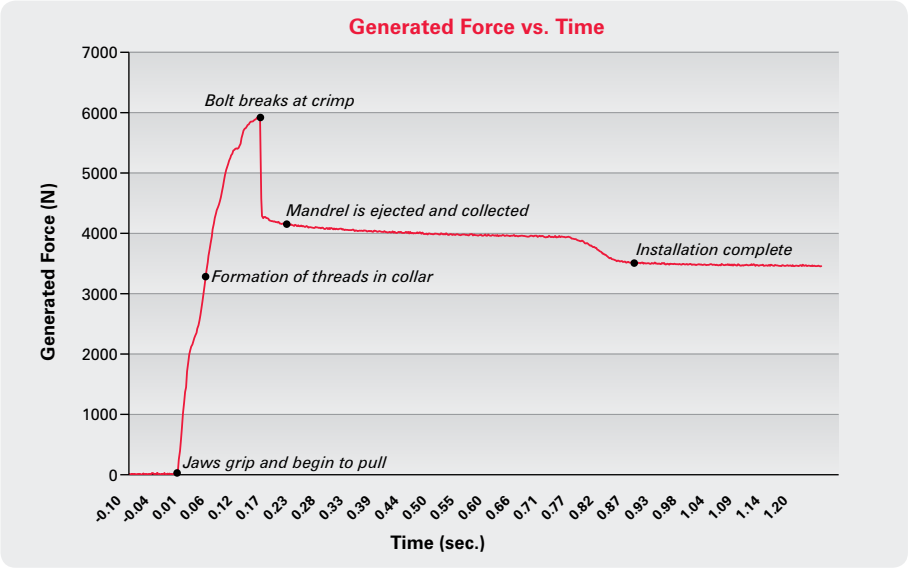

POP Bolt™ before setting

POP Bolt™ after setting

POP Bolt™ Head and Collar Styles

POP Bolt™ Head Styles

POP Bolt™ is available in standard head style configurations as seen below:

Hex Washer Head

Slotted Truss Head

POP Bolt™ Collar Styles

POP Bolt™ collars are available as standard in steel and aluminium. (Stainless steel collars are available on request.)

During the setting process the nosepiece of the setting tool dictates the final shape the collar will have externally, once formed into a nut.

The two options are:

Hex Set

This hexagonal form is suitable for easy removal with a conventional wrench.

Secureset

This rounded form offers excellent tamper resistance and can be removed with a reverse spiral fluted socket. Additional benefits of Secureset are improved vibration resistance and a higher tensile yield.

Hex Washer Head Bolt

8.8 Grade Steel

THREAD SIZE	DESCRIPTION	d_k	k	l	l_1	g	KG /1,000	ARTICLE	BOX QTY	PCS-6S HEX SET T	PCS-6S SECURESET T
		mm	mm	mm	mm	mm	kg			N	N
M6	PBS-HWH-8-M6X13	13.6	6.8	29	13	0-3.5	8.10	78908	500	7,000	10,000
	PBS-HWH-8-M6X16	13.6	6.8	32	16	1.5-6.5	8.66	78909	500	7,000	10,000
	PBS-HWH-8-M6X19	13.6	6.8	35	19	4.5-9.5	9.20	78910	500	7,000	10,000
	PBS-HWH-8-M6X22	13.6	6.8	38	22	7.5-12.5	9.74	78911	500	7,000	10,000
	PBS-HWH-8-M6X25	13.6	6.8	41	25	10.5-15.5	10.30	78912	500	7,000	10,000
	PBS-HWH-8-M6X28	13.6	6.8	44	28	13.5-18.5	10.84	78921	500	7,000	10,000
	PBS-HWH-8-M6X31	13.6	6.8	47	31	16.5-21.5	11.38	78922	500	7,000	10,000
	PBS-HWH-8-M6X34	13.6	6.8	50	34	19.5-24.5	11.93	78923	500	7,000	10,000
	PBS-HWH-8-M6X37	13.6	6.8	53	37	22.5-27.5	12.47	78924	500	7,000	10,000
	PBS-HWH-8-M6X40	13.6	6.8	56	40	25.5-30.5	13.02	78925	500	7,000	10,000

Slotted Truss Head Bolt

8.8 Grade Steel

THREAD SIZE	DESCRIPTION	d_k	k	l	l_1	g	KG /1,000	ARTICLE	BOX QTY	PCS-6S HEX SET T	PCS-6S SECURESET T
		mm	mm	mm	mm	mm	kg			N	N
M6	PBS-THS-8-M6X13	16	3.5	29	13	0-3.5	7.03	78936	500	7,000	10,000
	PBS-THS-8-M6X16	16	3.5	32	16	1.5-6.5	7.58	78937	500	7,000	10,000
	PBS-THS-8-M6X19	16	3.5	35	19	4.5-9.5	8.13	78938	500	7,000	10,000
	PBS-THS-8-M6X22	16	3.5	38	22	7.5-12.5	8.68	78939	500	7,000	10,000
	PBS-THS-8-M6X25	16	3.5	41	25	10.5-15.5	9.22	78940	500	7,000	10,000
	PBS-THS-8-M6X28	16	3.5	44	28	13.5-18.5	9.76	78941	500	7,000	10,000
	PBS-THS-8-M6X31	16	3.5	47	31	16.5-21.5	10.31	78942	500	7,000	10,000
	PBS-THS-8-M6X34	16	3.5	50	34	19.5-24.5	10.86	78943	500	7,000	10,000
	PBS-THS-8-M6X37	16	3.5	53	37	22.5-27.5	11.40	78944	500	7,000	10,000
	PBS-THS-8-M6X40	16	3.5	56	40	25.5-30.5	11.95	78945	500	7,000	10,000

Collars

For Steel Bolts

SIZE	MATERIAL	DESCRIPTION	d_f	l	KG /1,000	ARTICLE	BOX QTY
			mm	mm	kg		
6mm	Steel	PCS-6S	16	10.25	4.50	78904	500

d_k=Head Diameter; d_f=Flange Diameter; k=Head Thickness; l=Length; l_1=Thread Length; g=Grip Range (Min - Max); T=Tensile Strength

Hex Washer Head Bolt

A2 Grade Stainless Steel

THREAD SIZE	DESCRIPTION	d_k	k	l	l_1	g	KG /1,000	ARTICLE	BOX QTY	PCS-6S HEX SET T	PCS-6S SECURESET T	PCA-6S HEX SET T	PCA-6S SECURESET T
		mm	mm	mm	mm	mm	kg			N	N	N	N
M6	PBSS-HWH-A2-M6X13	13.6	6.8	29	13	0-3.5	8.10	78983	500	7,000	10,000	5,700	9,000
	PBSS-HWH-A2-M6X16	13.6	6.8	32	16	1.5-6.5	8.66	78984	500	7,000	10,000	5,700	9,000
	PBSS-HWH-A2-M6X19	13.6	6.8	35	19	4.5-9.5	9.20	78985	500	7,000	10,000	5,700	9,000
	PBSS-HWH-A2-M6X22	13.6	6.8	38	22	7.5-12.5	9.74	78986	500	7,000	10,000	5,700	9,000
	PBSS-HWH-A2-M6X25	13.6	6.8	41	25	10.5-15.5	10.30	78987	500	7,000	10,000	5,700	9,000
	PBSS-HWH-A2-M6X28	13.6	6.8	44	28	13.5-18.5	10.84	78988	500	7,000	10,000	5,700	9,000
	PBSS-HWH-A2-M6X31	13.6	6.8	47	31	16.5-21.5	11.38	78989	500	7,000	10,000	5,700	9,000
	PBSS-HWH-A2-M6X34	13.6	6.8	50	34	19.5-24.5	11.93	78990	500	7,000	10,000	5,700	9,000
	PBSS-HWH-A2-M6X37	13.6	6.8	53	37	22.5-27.5	12.47	78991	500	7,000	10,000	5,700	9,000
	PBSS-HWH-A2-M6X40	13.6	6.8	56	40	25.5-30.5	13.02	78992	500	7,000	10,000	5,700	9,000

Slotted Truss Head Bolt

A2 Grade Stainless Steel

THREAD SIZE	DESCRIPTION	d_k	k	l	l_1	g	KG /1,000	ARTICLE	BOX QTY	PCS-6S HEX SET T	PCS-6S SECURESET T	PCA-6S HEX SET T	PCA-6S SECURESET T
		mm	mm	mm	mm	mm	kg			N	N	N	N
M6	PBSS-THS-A2-M6X13	16	3.5	29	13	0-3.5	7.03	79012	500	7,000	10,000	5,700	9,000
	PBSS-THS-A2-M6X16	16	3.5	32	16	1.5-6.5	7.58	79013	500	7,000	10,000	5,700	9,000
	PBSS-THS-A2-M6X19	16	3.5	35	19	4.5-9.5	8.13	79014	500	7,000	10,000	5,700	9,000
	PBSS-THS-A2-M6X22	16	3.5	38	22	7.5-12.5	8.68	79015	500	7,000	10,000	5,700	9,000
	PBSS-THS-A2-M6X25	16	3.5	41	25	10.5-15.5	9.22	79016	500	7,000	10,000	5,700	9,000
	PBSS-THS-A2-M6X28	16	3.5	44	28	13.5-18.5	9.76	79017	500	7,000	10,000	5,700	9,000
	PBSS-THS-A2-M6X31	16	3.5	47	31	16.5-21.5	10.31	79018	500	7,000	10,000	5,700	9,000
	PBSS-THS-A2-M6X34	16	3.5	50	34	19.5-24.5	10.86	79019	500	7,000	10,000	5,700	9,000
	PBSS-THS-A2-M6X37	16	3.5	53	37	22.5-27.5	11.40	79020	500	7,000	10,000	5,700	9,000
	PBSS-THS-A2-M6X40	16	3.5	56	40	25.5-30.5	11.95	79021	500	7,000	10,000	5,700	9,000

Collars

For Stainless Steel Bolts

SIZE	MATERIAL	DESCRIPTION	d_f	l	KG /1,000	ARTICLE	BOX QTY
			mm	mm	kg		
6mm	Steel	PCS-6S	16	10.25	4.50	78904	500
6mm	Aluminium	PCA-6S	16	10.25	1.61	79034	500

Stainless Steel collars available on request.

d_k=Head Diameter; d_f=Flange Diameter; k=Head Thickness; l=Length; l_1=Thread Length; g=Grip Range (Min - Max); T=Tensile Strength

Hex Head Bolt

A2 Grade Stainless Steel

THREAD SIZE	DESCRIPTION	l (mm)	l_1 (mm)	g (mm)	KG /1,000 (kg)	ARTICLE	BOX QTY	PCS-6S HEX SET T (N)	PCS-6S SECURESET T (N)	PCA-6S HEX SET T (N)	PCA-6S SECURESET T (N)
M6	PBSS-TFX-A2-M6X13	29	13	0-3.5	13.71	79170	250	7,000	10,000	5,700	9,000
	PBSS-TFX-A2-M6X16	32	16	1.5-6.5	14.27	79171	250	7,000	10,000	5,700	9,000
	PBSS-TFX-A2-M6X19	35	19	4.5-9.5	14.81	79172	250	7,000	10,000	5,700	9,000
	PBSS-TFX-A2-M6X22	38	22	7.5-12.5	15.35	79173	250	7,000	10,000	5,700	9,000
	PBSS-TFX-A2-M6X25	41	25	10.5-15.5	15.91	79174	250	7,000	10,000	5,700	9,000
	PBSS-TFX-A2-M6X28	44	28	13.5-18.5	16.45	79175	250	7,000	10,000	5,700	9,000
	PBSS-TFX-A2-M6X31	47	31	16.5-21.5	16.99	79176	250	7,000	10,000	5,700	9,000
	PBSS-TFX-A2-M6X34	50	34	19.5-24.5	17.54	79177	250	7,000	10,000	5,700	9,000
	PBSS-TFX-A2-M6X37	53	37	22.5-27.5	18.08	79178	250	7,000	10,000	5,700	9,000

Carrier Dimensions

Nylon 6

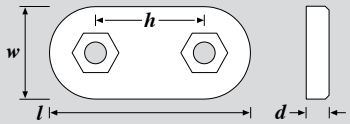

WIDTH w (mm)	LENGTH l (mm)	HOLE CENTRES h (mm)	DEPTH d (mm)
25	53	28.5	6

Collars

For Stainless Steel Bolts

SIZE	MATERIAL	DESCRIPTION	d_f (mm)	l (mm)	KG /1,000 (kg)	ARTICLE	BOX QTY
6mm	Steel	PCS-6S	16	10.25	4.50	78904	500
6mm	Aluminium	PCA-6S	16	10.25	1.61	79034	500

Stainless Steel collars available on request.

The Twinfix installation method

l=Length; l_1=Thread Length; g=Grip Range (Min - Max); T=Tensile Strength; W=Width; h=Hole Centres; d=Depth; d_f=Flange Diameter

Customer Specific Design Solutions

If a bespoke solution is required, the experienced Emhart Application Engineering Team is available to consult and advise on the best assembly method for your application.

In addition to the standard POP Bolt™ range various options are available:

Head Styles

Alternative head styles are available to suit differing application needs and user preference.

Weld Studs

The POP Bolt™ drawn arc weld stud is compatible with the Tucker® range of stud welding equipment.

Once the stud is welded in place and the nut has been applied, the component can be serviced, while the stud is left in place.

Clinch Bolts

The POP Bolt™ clinch bolt allows for the bolt section of the fastener to be pressed into thin sheet material.

Once the bolt is clinched in place and the nut has been applied, the component can be serviced, while the bolt is left in place.

POP Bolt™ Power Tool

ProSet® PSL2500CJ-HEX

The ProSet® range of power tools sets a new standard for pneumatic setting tools.

This POP Bolt™ setting tool is compact and lightweight, and features an integrated bolt release mechanism.

Features & Benefits:

- Lightweight aluminium and polymer construction
- Comfortable two finger, low activation force trigger
- Left or right swivel air fitting
- Airless mandrel collection system (MCS) to reduce air consumption
- Integrated bolt release mechanism
- Secureset nosepiece compatible

Mandrel Collection System (MCS)

PSL2500CJ-HEX
Article Number: **19661**

Specifications

Weight	1.31 kg
Length	304 mm
Height	259 mm
Tool stroke	18 mm
Working air pressure	5.0 - 6.9 bar
Pulling force	9400 N @ 6.2 bar
Force/Weight ratio	7.18 kN/kg
Air consumption	70 litres/min (max)

POP Bolt™ Battery Tool

MCS5800-HEX

Cordless, rechargeable battery tool.

This portable POP Bolt™ tool is ideal for site, automotive and maintenance work, or in instances that compressed air is not available.

Features & Benefits:

- Instant return to start position on release of trigger
- Up to 500 settings with one charge
- Integral Mandrel Collection System and suspension hanger
- Supplied in durable metal case, including tool, battery and charger
- Charging time approx. 1 hour

MCS5800-HEX
Article Number: **17501**

Specifications

Weight	2.2 kg
Length	265 mm
Height	300 mm
Tool stroke	20 mm

Secureset

The Secureset nosepiece is available for use in both POP Bolt™ tools.

Installation of either the Hex or Secureset nosepiece in both POP Bolt™ tools takes a matter of minutes.

Secureset gives a rounded form to the assembled POP Bolt™ nut, for tamper resistance.

A Secureset nut is removable using a reverse spiral fluted socket.

Secureset Nosepiece
Article Number: **79180**

EUROPE

United Kingdom
Emhart Teknologies
Tucker Fasteners

177 Walsall Road
Birmingham, B42 1BP
United Kingdom
Tel: +44 121 356 4811
Fax: +44 121 356 1598
csduk@bdk.com

The Netherlands
Emhart Teknologies

P.O. Box 514
6190 BA Beek
Europalaan 12
6199 AB Maastricht-Airport
The Netherlands
Tel: +31 43 750 2020
Fax: +31 43 750 2030

Spain
Emhart Teknologies
Sistemas de Fijacion Tucker

Carretera M-300
KM. 29,700
28802 Alcalá de Henares
Madrid, Spain
Tel: +34 91 887 1470
Fax: +34 91 882 3602
sft.pedidos@bdk.com

France
Emhart Teknologies
Emhart Fastening & Assembly S.N.C.

ZA des Petits Carreaux
2 Bis Avenue des Coquelicots
94385 Bonneuil-sur-Marne
Cedex, France
Tel: +33 1 56 71 24 37
Fax: +33 1 49 80 42 93
csdfr@bdk.com

Germany
Emhart Teknologies
Tucker Fasteners GmbH

Max-Eyth-Strasse 1
D-35394 Giessen
Germany
Tel: +49 641 405 0
Fax: +49 641 405 300
pop.de@bdk.com

Norway
Emhart Teknologies
Emhart Sjong

PO Box 203
Skjutbanevägen 6
S-701 44 Örebro
Sweden
Tel: +47 22 90 99 90
Fax: +46 19 26 00 38
info@emhart-teknik.se

Denmark
Emhart Teknologies
Emhart Harttung A/S

Farverland 1B
DK-2600 Glostrup
Denmark
Tel: +45 44 84 11 00
Fax: +45 44 84 62 12
salg.danmark@bdk.com

Sweden
Emhart Teknologies
Emhart Teknik AB

PO Box 203
Skjutbanevägen 6
S-701 44 Örebro
Sweden
Tel: +46 19 20 58 00
Fax: +46 19 26 00 38
info@emhart-teknik.se

Finland
Emhart Teknologies
Emhart Finland

Hyttimestarinkuja 4 PL 25
FI-02781, Espoo
Finland
Tel: +358 9 819 0060
Fax: +358 9 812 428
myynti.emhart@bdk.com

Czech Republic
Emhart Teknologies
Tucker s.r.o.

Tel: +420 725 800 454
Fax: +420 493 546 567

Poland
Emhart Teknologies

Tel: +48 661 233 304
Fax: +48 32 749 70 75

AMERICAS

USA - Connecticut
Emhart Teknologies

4 Corporate Drive, Suite 395
Shelton, CT 06484
USA
Tel: +1 203 925 2260
Fax: +1 203 925 2279

Canada
Emhart Teknologies

9870 Boulevard Du Golf
Anjou, Quebec
Canada HIJ 2Y7
Tel: +1 514 351 0330
Fax: +1 514 351 0458

Mexico
Emhart Teknologies

Bosque De Cidros
Acceso Radiatas No 42
Bosque De Las Lomas,
3a Seccion, Mexico City
Mexico DF 05120
Tel: +52 55 5326 7100
Fax: +52 55 5236 7141

Brazil
Emhart Teknologies
Emhart Refal

Rua Ricardo Cavatton, 226
CEP: 05038-110 São Paulo
Brazil
Tel: +52 55 11 3871 6460
Fax: +52 55 11 3611 3505

ASIA

China
Emhart Teknologies
Shanghai Emhart Fastening Systems

488 Jialou Road
Jaiding District
Shanghai 201807, China
Tel: +86 21 5954 8626
Fax: +86 21 5954 8775

Japan
Emhart Teknologies

Shuwa Kioicho Park Building 302
3-6 Kioicho, Chiyoa-Ku
Tokyo, 1020094, Japan
Tel: +81 3 3265 7291
Fax: +81 3 3265 7298

Korea
Emhart Teknologies

Seorin Building
45-15 Yeoido-Dong
Yeongdeungpo-Ku
Seoul, 150-891, R.O. Korea
Tel: +82 2 783 9226
Fax: +82 2 783 9228

India
Emhart Teknologies

APEX Towers, 5th Floor
No 54, 2nd Main Road
R.A. Puram, Chennai- 600028
India
Tel: +91 44 4306 0639
Fax: +91 44 4306 0768

© Emhart Teknologies 2009

The latest version of this catalogue is available to view and download at www.emhartmedia.com

POP®, ProSet® and Tucker® are registered trademarks of Emhart Teknologies.
POP Bolt™ is a trademark of Emhart Teknologies.

Quality systems approvals from the world's household names in manufacturing serve to reinforce accreditation to QS9000 / ISO9001 / TS16949.
As a result of our continuous design improvement, Emhart products are subject to modification. The latest technical data and drawings are available for any specific products on request.

6385/GB/0509

www.emhart.com

Emhart® Teknologies
A BLACK&DECKER COMPANY